MECALAC

MCL SERIES

EN

MCL SERIES MECALAC

MCL SERIES

MCL2

MCL4

MCL4+ *Short Boom*

MCL6

MCL6+ *Short Boom*

MCL8 +

MCL SERIES

SPACE MANAGEMEN

VERSATILITY

- **A** Powerful and reliable turbo diesel engine with up to 36 kW which complies with Stage V exhaust emission standards by integrating a particulate filter
- **B** Hydrostatic 4-wheel drive transmission with wheel motors (MCL2) or gearbox and transmission shaft (MCL4-MCL6-MCL8)
- **C** Articulated and oscillating chassis ensures excellent maneuverability and off-road capability
- **D** Working hydraulic system with up to 30 lpm (MCL2-MCL4) or up to 60 lpm (MCL6-MCL8) for best attachment performance support
- **E** Two different booms for individual customer needs
  - Long boom with increased dumping height
  - Short boom with increased tipping load
- Optional MyMecalac telematics to maximise the use of your machines thanks to optimized and accessible machine data, reduced downtimes, and better fleet management
- **F** All machines come with a large and comfortable canopy version, a cabin version is as well available
- **G** The optional air conditioning is available for MCL6-MCL8 to provide the best thermal comfort
- **H** Maximum travelling comfort thanks to articulation joint
- **I** Canopy and cabin with flexible four point mountings to reduce vibration and noise for maximum driver comfort and minimum noise level
- **J** Extensive range of quick couplers for different attachment systems

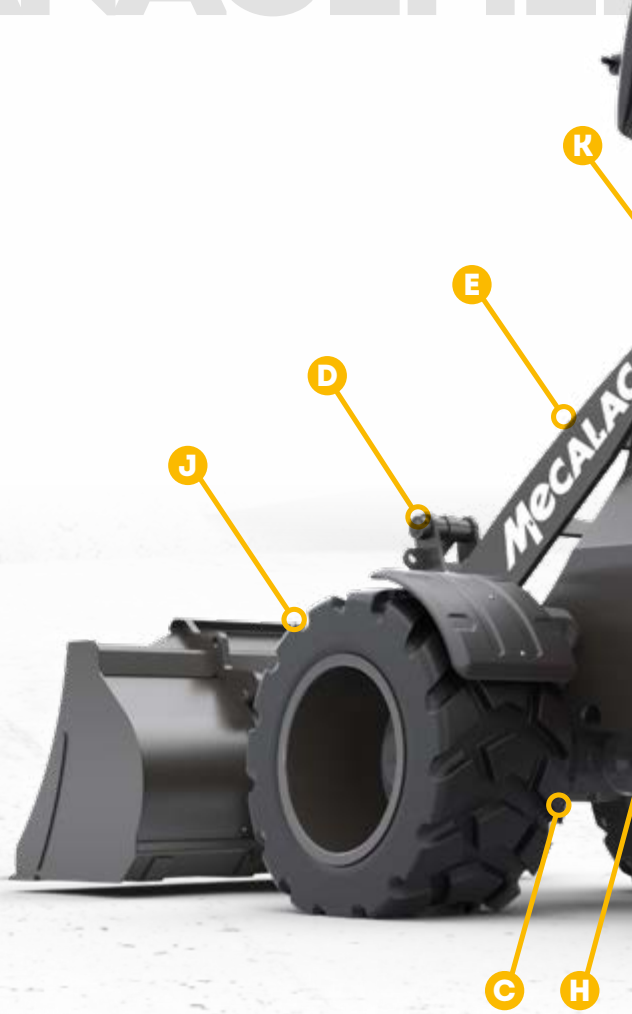

EASE OF USE

PERFORMANCE

K	Easy and safe access from both sides thanks to high visibility and self-cleaning steps and handrails
L	Cast iron rear counter-weight protection
M	Low and straight step to enter and leave the machine comfortably and safely
N	Easy access to all relevant parts for the daily maintenance
O	1 LED working light standard on the boom (or optional 2 LED lights). Up to 2 front and 2 rear optionalt LED working lights on canopy / cabin

SERVICES

PERFORMANCE, PROFITABILITY, LONGEVITY

DISCOVER OUR SERVICES

MECALAC PREMIUM LUBRICANTS

Premium lubricants to get the best out of your machines:

- Extended machine life
- Extended warranty and extended oil change intervals
- All-weather efficiency

MY MECALAC CONNECTED SERVICES

To optimise the use of its machines, MECALAC offers a range of telematics services:

- Remote fleet management
- Access to all machine usage data of the machines
- Limited machine downtime thanks to preventive maintenance

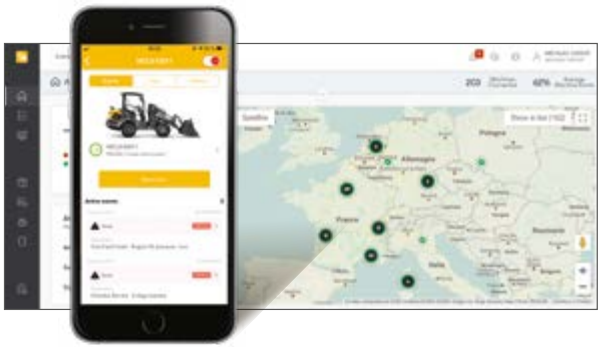

MY MECALAC CONNECTED SERVICES

MECALAC GENUINE PARTS

Only enuine MECALAC parts ensure optimum service life and maximum performance:

- Certified genuine parts
- Maintenance kits
- Extended warrantya

MECALAC TRAINING

Make full use of the full potential of your Mecalac machines:

- Efficient use
- Individual coaching
- Intensive practice

MECALAC FINANCIAL SOLUTIONS

A complete range of financial products and associated services to meet your specific needs:

- Machine purchase
- Machine rental
- Competitive rates

WARRANTY EXTENSIONS

Our solutions are well-adpated to your needs to maximise the life of your machines:

- Customised contracts
- Peace of mind
- Controlled expenses

The list of services offered may vary depending on your country.
Consult your local Mecalac dealer for details.

MCL SERIES

STANDARD / OPTIONNAL FEATURES

MCL SERIES

STANDARD / OPTIONAL FEATURES

SPEED	MCL2	MCL4	MCL4+	MCL6	MCL6+	MCL8
12 km/h (7 mph) version	•					
20 km/h (12 mph) version		•	•	•	•	•
20 km/h (12 mph) with differential lock 100%				o	o	o
30 km/h (19 mph) version				o	o	o
30 km/h (19 mph) with differential lock 100%				o	o	o
COLOR						
Mecalac Color	•	•	•	•	•	•
Special Color	o	o	o	o	o	o
CANOPY / CABIN						
Canopy	•	•	•	•	•	•
Cabin with heating	o	o	o	o	o	o
Cabin with heating and air conditioning				o	o	o
ROPS side gates	o	o	o	o	o	o
Rearview mirror (interior mirror)	o	o	o	o	o	o
SEAT						
Standard seat - Mechanical suspension	•	•	•	•	•	•
Heated pneumatic seat	o	o	o	o	o	o
RADIO						
Radio predisposition (cabin only)	o	o	o	o	o	o
Radio (cabin only)	o	o	o	o	o	o
BOOM						
Long boom	•	•	•	•	•	•
Short Boom		o	o	o	o	
STANDARD TYRES						
7 x 12.00 - Agriculture profile (≈1040 mm (3'5") width)	•					
10.0/75 - 17 Agri Profile (≈1100 mm (3'7") width)		•	•	•	•	
11.5/80 - 15.3 - Agriculture profile (≈1236 mm (4') width)						•
FENDERS						
Fenders	•	•	•	•	•	•
Wide fenders	o	o	o	o	o	o
Extra wide fenders				o	o	o
QUICK ATTACH						
Skid-Steer mechanical QA	•	•	•			
4 Points hydraulic QA	o	o	o	•	•	•
Euro-Style QA	o	o	o	o	o	o
Skid-steer hydraulic QA	o	o	o	o	o	o
AUXILIARY LINES						
On / Off hydraulic for 1st auxiliary hydraulic line	•	•	•			
Proportional hydraulic for 1st auxiliary hydraulic line	o	o	o	•	•	•
2nd auxiliary hydraulic line (T) - Hydraulic flat face fittings for 2nd auxliary hydraulic line	o	o	o	o	o	o
Rear auxiliary hydraulic line (T) in Flat face	o	o	o	o	o	o

WORKING LIGHTS	MCL2	MCL4	MCL4+	MCL6	MCL6+	MCL8
1 working light (LED) on boom	•	•	•	•	•	•
2 working lights (LED) on boom	o	o	o	o	o	o
2 front working lights (LED) on canopy / cabin	o	o	o	o	o	o
2 rear working lights (LED) on canopy / cabin	o	o	o	o	o	o
BEACON						
Beacon light (LED)	o	o	o	o	o	o
ELECTRICAL PLUGS						
3-pole front electric plug for power supply 12V/15A	o	o	o	o	o	o
7-pole front electric plug for attachment lights	o	o	o	o	o	o
7-pole rear electric plug	o	o	o	o	o	o
Harness for trailer lights + rear power	o	o	o	o	o	o
Harness for rear power 12V/15A	o	o	o	o	o	o
ROAD LIGHTS						
Road lights	o	o	o	o	o	o
Road lights with homologation Germany 20 km/h (12 mph)	o	o	o	o	o	o
Road lights with homologation Germany 30 km/h (19 mph)				o	o	o
Road lights with homologation Italy	o	o	o	o	o	o
TELEMATICS						
Telematics	o	o	o	o	o	o
COMFORT OPTIONS						
Hand throttle (M-Drive)	o	o	o	•	•	•
Travel speed detent				o	o	o
Detent button for auxiliary hydraulic line	o	o	o	•	•	•
Boom float	•	•	•	•	•	•
Boom and bucket float position	o	o	o	o	o	o
Lockable fuel tank cap	•	•	•	•	•	•
Speed limit (Speed-control)	o	o	o	•	•	•
SAFETY OPTIONS						
Safety valves w.o. ride control	o	o	o	o	o	o
Ride control w.o. safety valves	o	o	o	o	o	o
Safety valves & ride control	o	o	o	o	o	o
Drawbar hitch	o	o	o	o	o	o
Backup alarm	o	o	o	o	o	o
Road safety kit	o	o	o	o	o	o
HYDRAULIC OIL						
Standard oil VG 46	•	•	•	•	•	•
VG 46 synthetic - Panolin	o	o	o	o	o	o
Standard oil VG 68	o	o	o	o	o	o
VG 68 synthetic - Panolin	o	o	o	o	o	o
Standard oil VG 32	o	o	o	o	o	o

• Standard o Optional

MCL SERIES

TECHNICAL DATA

ENGINE	MCL2 / MCL4 / MCL4+ / MCL6 / MCL6+ / MCL8					
Low-noise, water-cooled Perkins	EU Stage V / U.S. EPA Tier 4 Final - Depending on your local legislation					
	MCL2	**MCL4**	**MCL4+**	**MCL6**	**MCL6+**	**MCL8**
Engine brand	Perkins					
Type	403J-11	403J-17	403J-17	403J-E17T	403J-E17T	403J-E17T
Number of cylinders / Capacity of cylinders	3 (Ø77x81)	3 (Ø84x100)	3 (Ø84x100)	3 (Ø84x100)	3 (Ø84x100)	3 (Ø84x100)
I.C. Engine power rating / Power (kW)	-	-	-	-	-	-
Engine cooling system	Liquid					
Net power at acc. to ISO 14396	2800 rpm 18.4 kW / 25 hp	2800 rpm 18.4 kW / 25 hp	2800 rpm 18.4 kW / 25 hp	2800 rpm 36 kW / 49 hp	2800 rpm 36 kW / 49 hp	2800 rpm 36 kW / 49 hp
Max. torque at acc. to ISO 14396	2100 rpm 66.8 Nm	1800 rpm 85 Nm	1800 rpm 85 Nm	1600 rpm 166 Nm	1600 rpm 166 Nm	1600 rpm 166 Nm

PERFORMANCE DATA	MCL2	MCL4	MCL4+	MCL6	MCL6+	MCL8
Boom type	Std boom	Std boom	Short boom	Std boom	Short boom	Std boom
Transport weight (canopy)	1740kg (3836 lb)	2400 kg (5291 lb)	2340 kg (5159 lb)	2450 kg (5401 lb)	2390 kg (5269 lb)	2850 kg (6283 lb)
Bucket capacity	0.36 - 0.49	0.39 - 0.49		0.39 - 0.52		0.42 - 0.52
Oscillation angle	±10°	±10°		±10°		±10°
Articulation angle	±45°	±45°		±45°		±40
Lifting force at ground position	1242 daN*	2025 daN*	2026 daN*	2025 daN*	2026 daN*	2517 daN*
Breakout force	1422 daN*	2015 daN*	2015 daN*	2015 daN*	2015 daN*	2501 daN*
Thrust force	1141 daN (2565 lbf)	1955 daN (4395 lbf)		1955 daN (4395 lbf)		2140 daN (4811 lbf)
Tipping load: - Standard bucket, straight - Standard bucket, articulated	 1015 kg (2238 lb) 865 kg (1907 lb)	 1650 kg (3638 lb) 1450 kg (3197 lb)	 1885 kg (4156 lb) 1655 kg (3649 lb)	 1675 kg (3693 lb) 1470 kg (3241 lb)	 1910 kg (4211 lb) 1680 kg (3704 lb)	 1880 kg (4145 lb) 1650 kg (3638 lb)
Tipping load: - Forks, straight - Forks, articulated	 740 kg (1631 lb) 630 kg (1389 lb)	 1250 kg (2756 lb) 1095 kg (2414 lb)	 1390 kg (3064 lb) 1220 kg (2690 lb)	 1265 kg (2789 lb) 1110 kg (2447 lb)	 1410 kg (3108 lb) 1235 kg (2723 lb)	 1470 kg (3241 lb) 1295 kg (2855 lb)

* To be confirmed

HYDRAULICS	MCL2	MCL4	MCL4+	MCL6	MCL6+	MCL8
Hydraulic pump type	Gear	Gear	Gear	Gear	Gear	Gear
Hydraulic flow - Pressure	207 bar (3,000 psi)	207 bar (3,000 psi)	207 bar (3,000 psi)	207 bar (3,000 psi)	207 bar (3,000 psi)	207 bar (3,000 psi)
Hydraulic flow	30 l/min (7.9 gpm)	30 l/min (7.9 gpm)	30 l/min (7.9 gpm)	60 l/min (15.9 gpm)	60 l/min (15.9 gpm)	60 l/min (15.9 gpm)

TANK CAPACITIES	MCL2	MCL4	MCL4+	MCL6	MCL6+	MCL8
Hydraulic oil	24 l (6.3 gal)	24 l (6.3 gal)	24 l (6.3 gal)	50 l (13.2 gal)	50 l (13.2 gal)	50 l (13.2 gal)
Fuel tank	30 l (7.9 gal)	50 l (13.2 gal)	50 l (13.2 gal)	50 l (13.2 gal)	50 l (13.2 gal)	65 l (17.2 gal)

MCL SERIES

TECHNICAL DATA

DRIVE	MCL2	MCL4	MCL4+	MCL6	MCL6+	MCL8
Transmission type	Hydrostatic with wheel motor	Hydrostatic with axles	Hydrostatic with axles	Hydrostatic with axles	Hydrostatic with axles	Hydrostatic with axles
Number of gears (forward / reverse)	1	2	2	2	2	2
Differential lock	-	100% in option	100% in option	100% in option	100% in option	100% in option
Travel speed: Max. travel speed*	0-12 km/h (0-7 mph)	0-20 km/h (0-12 mph)	0-20 km/h (0-12 mph)	0-20 km/h (0-12 mph)	0-20 km/h (0-12 mph)	0-20 km/h (0-12 mph)
Oscillation: max. oscillation angle	+/-11°	+/-11°	+/-11°	+/-11°	+/-11°	+/-11°

*May vary according to applicable regulations

BRAKES	MCL2	MCL4	MCL4+	MCL6	MCL6+	MCL8
1. Inch brake	Hydrostatic inching brake, acting on all 4 wheels	Hydrostatic inching brake, acting on all 4 wheels	Hydrostatic inching brake, acting on all 4 wheels	Hydrostatic inching brake, acting on all 4 wheels	Hydrostatic inching brake, acting on all 4 wheels	Hydrostatic inching brake, acting on all 4 wheels
2. Working brake	-	Hydraulically operated disc brake at the front axle, acting on all 4 wheels	Hydraulically operated disc brake at the front axle, acting on all 4 wheels	Hydraulically operated disc brake at the front axle, acting on all 4 wheels	Hydraulically operated disc brake at the front axle, acting on all 4 wheels	Hydraulically operated disc brake at the front axle, acting on all 4 wheels
3. Parking brake	Electrically activated parking brake, acting on 2 rear wheels, with deactivation of the drive or switch	Mechanically activated parking brake, acting on all 4 wheels, with deactivation of the drive	Mechanically activated parking brake, acting on all 4 wheels, with deactivation of the drive	Mechanically activated parking brake, acting on all 4 wheels, with deactivation of the drive	Mechanically activated parking brake, acting on all 4 wheels, with deactivation of the drive	Mechanically activated parking brake, acting on all 4 wheels, with deactivation of the drive

MCL SERIES

TECHNICAL DATA

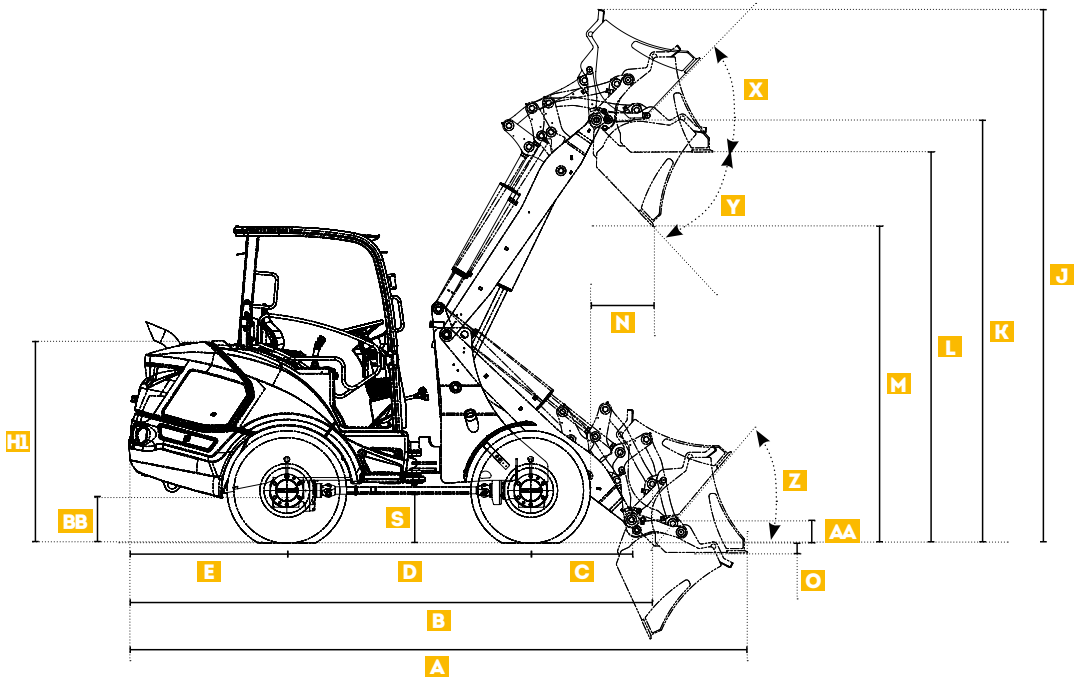

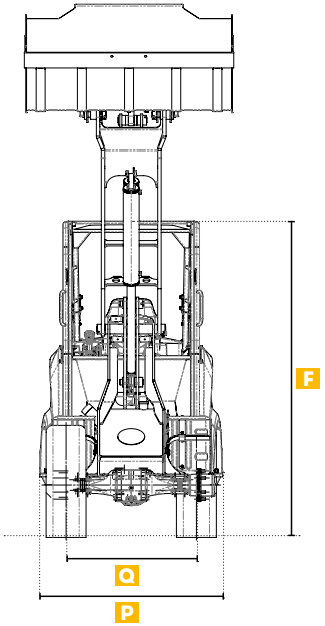

		MCL2	MCL4		MCL4+	MCL6		MCL6+	MCL8
		STD. 0.20 m³ (0.26 yd³)	STD. 0.30 m³ (0.39 yd³)			STD. 0.40 m³ (0.52 yd³)			STD. 0.50 m³ (0.65 yd³)
			Standard boom		Short boom	Standard boom		Short boom	
A	Overall Length /Bucket Level	3627 mm (11'10")	4154 mm (13'7")		4104 mm (13'5")	4279 mm (14'0")		4230 mm (13'10")	4490 mm (14'8")
B	Overall Length - Less Bucket	2928 mm (9'7")	3458 mm (11'4")		3406 mm (11'2")	3583 mm (11'9")		3531 mm (11'7")	3792 mm (12'5")
C	Front Wheel Center to Hinge Pin - Arm Down	563 mm (1'10")	669 mm (2'2")		617 mm (2'0")	669 mm (2'2")		617 mm (2'0")	733 mm (2'4")
D	Wheel Base	1419 mm (4'7")	1650 mm (5'4")		1650 mm (5'4")	1650 mm (5'4")		1650 mm (5'4")	1770 mm (5'9")
E	Rear Overhang	801 mm (2'7")	995 mm (3'3")		995 mm (3'3")	1120 mm (3'8")		1120 mm (3'8")	1146 mm (3'9")
F	Overall Height @ ROPS	2140 mm (7'0")	2258 mm (7'4")		2258 mm (7'4")	2258 mm (7'4")		2258 mm (7'4")	2290 mm (7'6")
H	Height to Top of Hood	1254 mm (4'1")	1405 mm (4'3")		1405 mm (4'3")	1405 mm (4'3")		1405 mm (4'3")	1469 mm (4'9")
J	Overall Operating Height - Fully Raised, Bucket Rolled Back	3535 mm (11'7")	3636 mm (11'11")		3253 mm (10'8")	3636 mm (11'11")		3253 mm (10'8")	3870 mm (12'8")
K	Height to Hinge Pin - Fully Raised	2736 mm (8'11")	2836 mm (9'3")		2435 mm (7'11")	2836 mm (9'3")		2435 mm (7'11")	3070 mm (10'0")
L	Ground Plane to Bucket Edge Height	2515 mm (8'3")	2595 mm (8'6")		2208 mm (7'2")	2595 mm (8'6")		2208 mm (7'2")	2837 mm (9'3")
M	Dump Height - Fully Raised	2008 mm (6'7")	2066 mm (6'9")		1829 mm (6'0")	2066 mm (6'9")		1829 mm (6'0")	2301 mm (7'6")
N	Dump Reach - Fully Raised	475 mm (1'6.7")	485 mm (1'7")		524 mm (1'8")	485 mm (1'7")		524 mm (1'8")	458 mm (1'6")
O	Digging Position (+ Above Ground / - Below Ground)	45 mm (0'1.7")	139 mm (0'5.4")		116 mm (0'4.5")	139 mm (0'5.4")		116 mm (0'4.5")	72 mm (0'2.8")
P	Overall Width - Less Bucket	1040 mm (3'4")	1100 mm (3'7")		1100 mm (3'7")	1100 mm (3'7")		1100 mm (3'7")	1330 mm (4'4")
Q	Track or Tread Width (Wheel Center)	848 mm (2'9")	836 mm (2'89")		836 mm (2'89")	836 mm (2'89")		836 mm (2'89")	946 mm (3'1")

MCL SERIES

TECHNICAL DATA

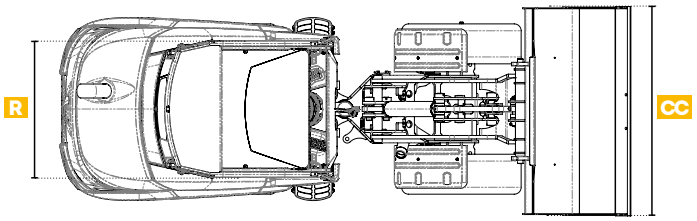

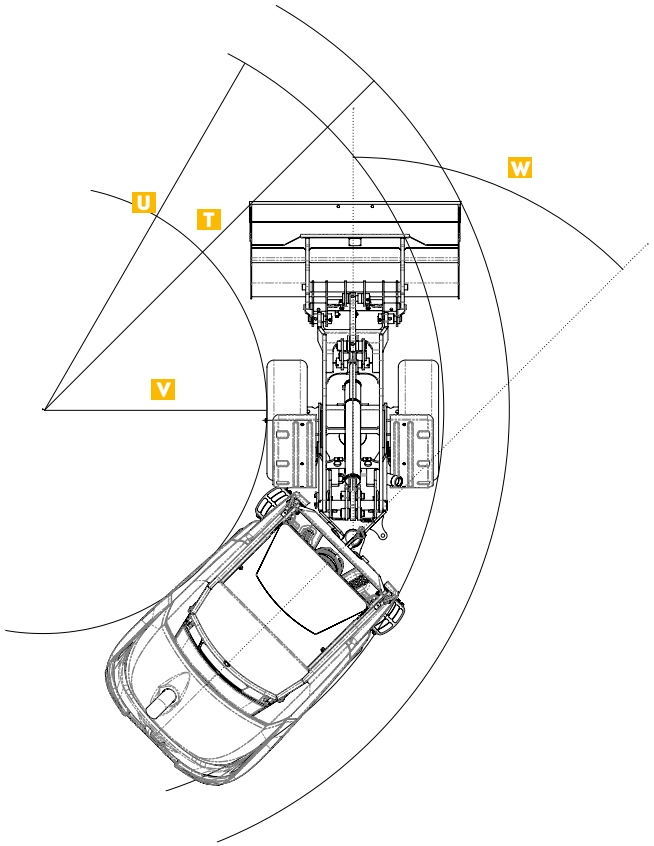

OVERALL WIDTH WITH DIFFERENT TIRE OFFERS

MCL2	
7 x 12.00 - AG	1040 mm (3'4")
27 x 8.5 - 15 - SK	1051 mm (3'5")
27 x 10.5 - 15 - EM	1113 mm (3'65")
26 x 12 - 12 - AG	1225 mm (4'0")
26 x 12 - 12 - EM	1227 mm (4'0")

MCL4 / MCL4+	
10/75 - 15.3	1100 mm (3'6")
10 x 16.5	1100 mm (3'6")
31 x 15.5 - 15 - AG	1350 mm (4'4")
31 x 15.5 - 15 - SK	1364 mm (4'5")
31 x 15.5 - 15 - TURF	1371 mm (4'5.9")
31 x 15.5 - 15 - EM	1380 mm (4'6")

MCL6 / MCL6+	
10/75 - 15.3	1100 mm (3'6")
10 x 16.5	1100 mm (3'6")
31 x 15.5 - 15 - AG	1350 mm (4'4")
15.0/55 - 17	1361 mm (4'5")
31 x 15.5 - 15 - SK	1364 mm (4'5")
31 x 15.5 - 15 - TURF	1371 mm (4'5.9")
31 x 15.5 - 15 - EM	1380 mm (4'6")

MCL8	
10/75 - 15.3	1330 mm (4'4")
10 x 16.5	1330 mm (4'4")
11.5/80 - 15.3	1330 mm (4'4")
31 x 15.5 - 15 - AG	1380 mm (4'6")
31 x 15.5 - 15 - SK	1394 mm (4'6")
31 x 15.5 - 15 - TURF	1401 mm (4'7")
31 x 15.5 - 15 - EM	1410 mm (4'7")
15.0/55 - 17	1435 mm (4'8")
425/55 R17	1472 mm (4'9")

		MCL2	MCL4	MCL4+	MCL6	MCL6+	MCL8
		STD. 0.20 m³ (0.26 yd³)	STD. 0.30 m³ (0.39 yd³)		STD. 0.40 m³ (0.52 yd³)		STD. 0.50 m³ (0.65 yd³)
			Standard boom	Short boom	Standard boom	Short boom	
R	Widest Fixed Point on Machine (ROPS width)	991 mm (3'3")	991 mm (3'3")	991 mm (3'3")	991 mm (3'3")	991 mm (3'3")	991 mm (3'3")
S	Ground Clearance	153 mm (0'6")	320 mm (1'0")	320 mm (1'0")	320 mm (1'0")	320 mm (1'0")	356 mm (1'2")
T	Clearance Radius - Front /Bucket @ Carry Position	2681 mm (8'9")	3246 mm (10'7")	3246 mm (10'7")	3246 mm (10'7")	3246 mm (10'7")	3361 mm (11'0")
U	Clearance Radius - Less Bucket	2251 mm (7'4")	2767 mm (9'0")	2767 mm (9'0")	2767 mm (9'0")	2767 mm (9'0")	2888 mm (9'5")
V	Clearance Radius - Inner	1194 mm (3'11")	1623 mm (5'3")	1623 mm (5'3")	1623 mm (5'3")	1623 mm (5'3")	1617 mm (5'3")
W	Max Articulation Angle	45°	45°	45°	45°	45°	40°
X	Maximum Rollback Angle - Fully Raised	45°	47°	49°	47°	49°	46°
Y	Dump Angle - Fully Raised	41°	46°	44°	46°	44°	47°
Z	Maximum Rollback Angle @ Ground	47°	50°	49°	50°	49°	50°
AA	Quick-attach Hinge Pin Ground Clearance (Pin Center)	192 mm (0'7")	103 mm (0'4.")	116 mm (0'4.5")	103 mm (0'4.")	116 mm (0'4.5")	168 mm (0'6")
BB	Height from ground to axle center	144 mm (0'5")	214 mm (0'8")	214 mm (0'8")	214 mm (0'8")	214 mm (0'8")	230 mm (0'9")
CC	Bucket width	1100 mm (3'7")	1520 mm (4'11")	1520 mm (4'11")	1520 mm (4'11")	1520 mm (4'11")	1520 mm (4'11")

Documents and specifications subject to change without notice. Photos are not contractually binding. Machines shown in photos may have equipment additional to or different from what is locally available. To find out the options available in your region, please contact your MECALAC dealer.

2022 MECALAC®. All rights reserved.

MK415/EN - MCL SERIES-07/22 **Layout** Service Communication Mecalac **Photo credits** Sémaphore - MFR - Fotolia **Non-binding document**

MECALAC FRANCE S.A.S.
2, avenue du Pré de Challes
Parc des Glaisins – CS 40230
Annecy-le-Vieux
FR - 74942 Annecy Cedex
Tel. +33 (0)4 50 64 01 63

MECALAC BAUMASCHINEN GMBH
Am Friedrichsbrunnen
D-24782 Büdelsdorf
Tel. +49 (0)43 31/3 51-319

MECALAC CONSTRUCTION EQUIPMENT UK LTD
Central Boulevard,
ProLogis Park
Coventry, CV6 4BX, UK
Tél. +44 (0)24 7633 9539

MECALAC İŞ MAKINELERI SAN VE TIC. LTD. ŞTI.
Ege Serbest Bölgesi Nilüfer 1 Sok. No: 34
35410, Gaziemir
İzmir - Türkiye
Tel. +90 232 220 11 15

WWW.MECALAC.COM